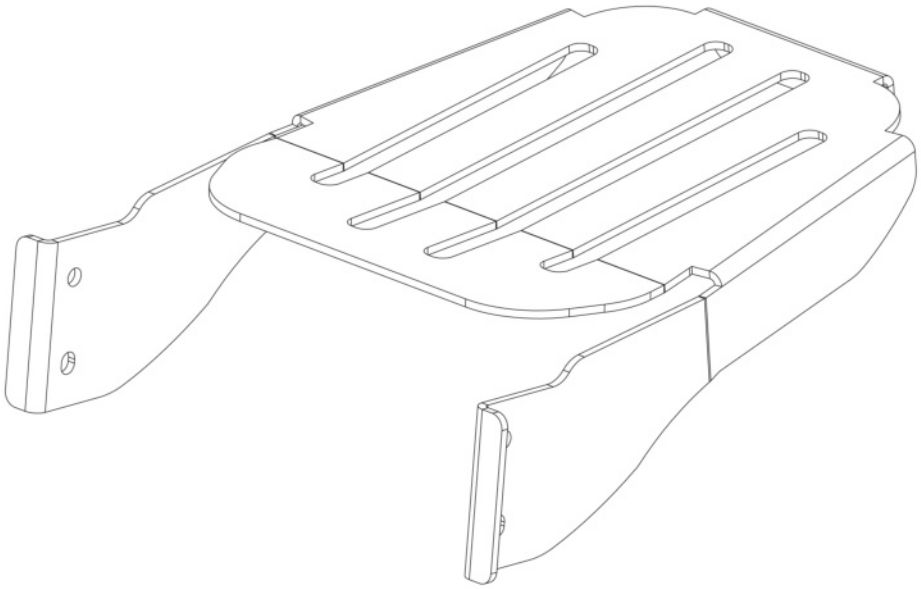
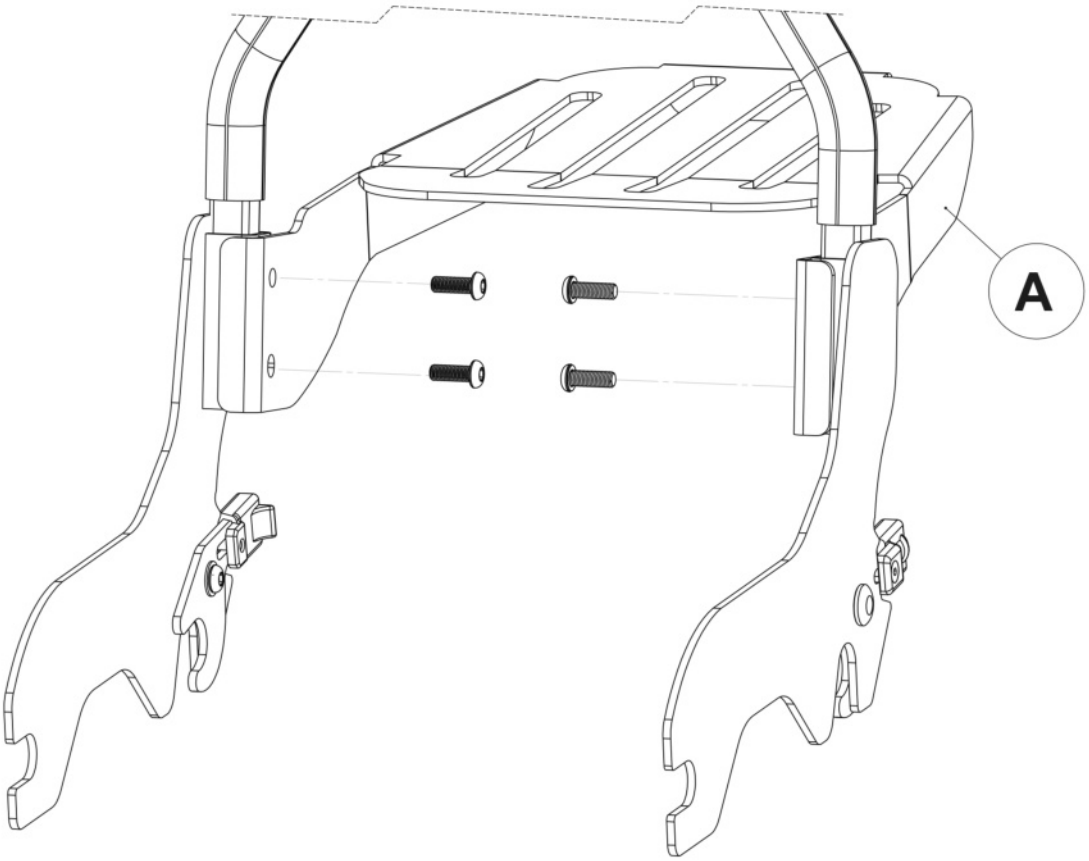
Ax1